DynaWave Lensometer

WaveFront DYNAMICS

A WaveFront Sciences Company

DynaWave is a metrology instrument for dynamic measurements of small optics at the ophthalmic standard wavelength of 545 nm.

DynaWave provides wide mechanical clearance around the object test plane for use with automated part handlers or other instrumentation used in industrial quality control and research.

Data acquisition and full wavefront analysis is high speed at 115 frames per second. This enables measurement of optics that are designed to change such as electronically variable liquid lenses, electronic contact lenses or accommodating IOLs. Sphere, cylinder, axis and wavefront maps are displayed in real time.

DynaWave also solves a problem that occurs with quality control of contact lenses and IOLs, and ICLs. Typically, multiple optics are immersed in a water tray and the tray moves to position each optic into the test zone. After each move, it takes time for the parts to settle, wasting time and introducing variability. With *DynaWave*, the parts can be stationary, and the user moves *DynaWave* over each part. *DynaWave* is lightweight and rigid to enable motorized positioning and the measurements are insensitive to vibration. A manual XYZ stage configuration is optional.

DynaWave also solves the problem of the measuring optics which are affected by orientation, such as a large diameter liquid lens. The optic can be attached to *DynaWave* and the entire assembly rotated into any orientation to measure how gravity affects the wavefront, astigmatism and beam steering.

DynaWave is designed to work with other optical test equipment. The standard configuration reflects a green beam off beam splitters above and below the object test plane. Mechanical viewports enable integration of other instruments such as cameras or OCT. Blue, yellow, orange, red or infrared wavelengths are available. Other configurations of the light source and beam splitters are available to customize *DynaWave* as needed for particular applications.

The data and analysis results are open format. Raw images and processed data files are saved to hard disk. Zernike coefficient files and zonal wavefront maps can be imported into programs such as Zemax light source and beam splitters are available to customize *DynaWave* as needed for particular applications.

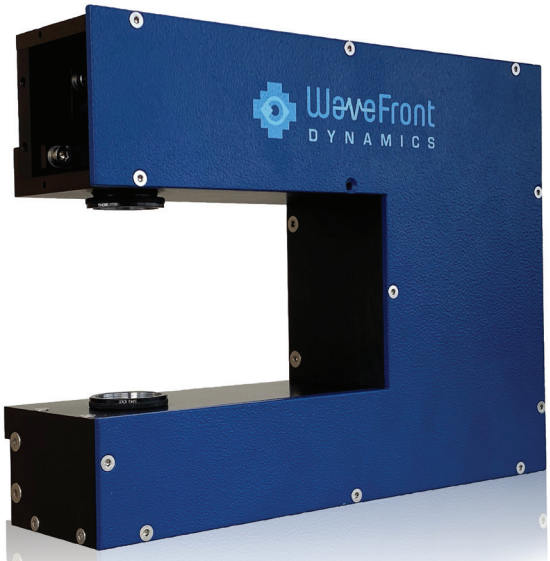

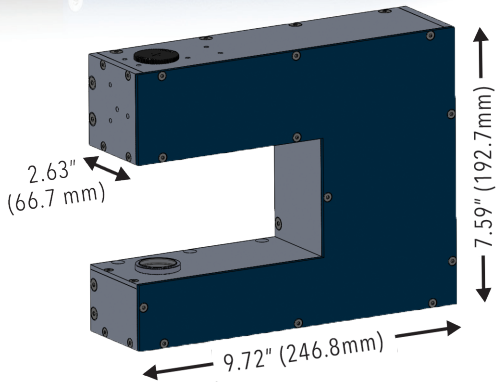

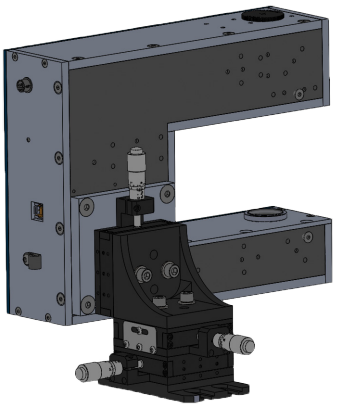

Manual Stage Option: *DynaWave Lensometer mounted on a 3-axis stage for precise positioning around existing equipment*

Standard DynaWave Specifications

- **Measurement speed:** 121 Hz using full camera resolution
  - *For faster speed (236 Hz), user can set camera configuration to pixel binning with somewhat reduced accuracy. (User also can set configuration back to normal)*
- **Wavelength:** 545 nm (standard Green LED)
  - *Other wavelengths available upon request*
- **Measurement zone size:** 6.4 mm x 8.7 mm
  - *Customizable upon request*
- **Spherical Equivalent Range:** +/- 5 Diopters at 5 mm diameter
  - *Converted range from water +/- 25 Diopters for lens with index of 1.42*
- **Cylinder Range:** +/- 5 Diopters at 5 mm diameter
  - *Converted range from water +/- 25 Diopters for lens with index of 1.42*
- **Accuracy:** +/- 0.02 Diopters
- **Mechanical dimensions:** 10 x 7.5 x 2.7 inches
- **Mechanical attachment:** adaptor plate with ¼-20 tapped holes provided
- **Location of measurement object plane:** 1.500 inches above reference surface
- **Mechanical clearance above object plane:** 1.3 inches
- **Mechanical clearance below object plane:** 1.3 inches
- **Mechanical clearance horizontal from edge of object plane measurement zone:** 4.2 inches
- **Wavelength ranges available through viewport:** 400-480 nm and 580-1400 nm.
- **Upper viewport configuration:** object plane under achromat lens, beam splitter and window
  - *Through upper viewport, a user supplied infinity focused camera has in-focus image of object plane*
- **Lower viewport configuration:** object plane above beam splitter and window.
  - *Through lower viewport, collimated probe beams are still collimated at object plane*
- **Clear aperture available through viewport:** 10 mm diameter.
  - *Up to 22 mm upon request*
- Power and data transmitted over single cable (standard USB3)
- Triggering via software or via second sync cable directly to camera.
- Construction resistant to water intrusion. Window mounts easily wiped dry and/or replaceable.
- Instrument calibration data stored inside instrument on USB memory stick
- **Software:** CLAS-2D running on laptop computer, Windows 10
  - *Custom software available upon request*
- **Data output files:** refraction (sphere, cylinder, axis), camera raw images, slopes, zonal wavefront, modal wavefront, Zernike coefficients, MTF, point spread function, simulated fringes (for comparison to interferometers)
- **Power maps:** User settable analysis diameters and position

Customizations available include different sized measurement regions, measurement wavelengths, viewport wavelength ranges, viewport configurations and mechanical clearances.

Contact us for your custom metrology solutions.

www.wavefrontdynamics.com

WaveFront DYNAMICS

Software

DynaWave has two different software platforms suited to different applications:

For researchers needing dynamic optical testing, the CLAS-2D software (Windows 10 version) acquires and analyzes data at user settable speeds, up to the full camera frame rate of 121 frames per second (faster if 2x2 pixel binning is enabled). CLAS-2D provides capabilities for lens power, astigmatism, axis, low and higher order aberrations, point spread function, MTF, Zernike and zonal wave front, and pointing stability. All the data can be acquired and analyzed dynamically to provide full response of the optic under test.

For production and quality control applications, a less sophisticated software system is available that only displays the most used images and analysis. However, this simpler software can also be set so all the data types can be run through the CLAS-2D software at a later time for advanced analysis.

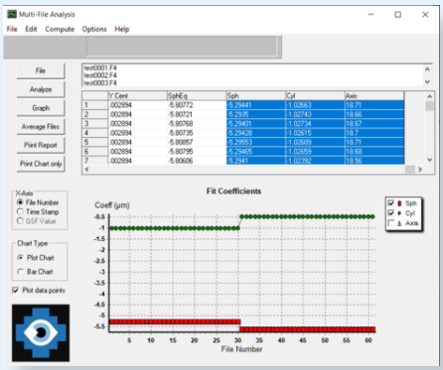

Power change with orientation step change for a liquid lens

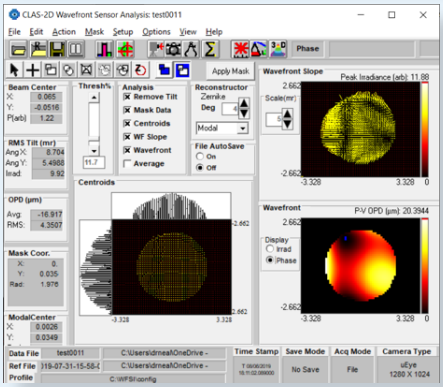

Complete wavefront analysis of the optical element. Either movies or static measurements can be displayed.

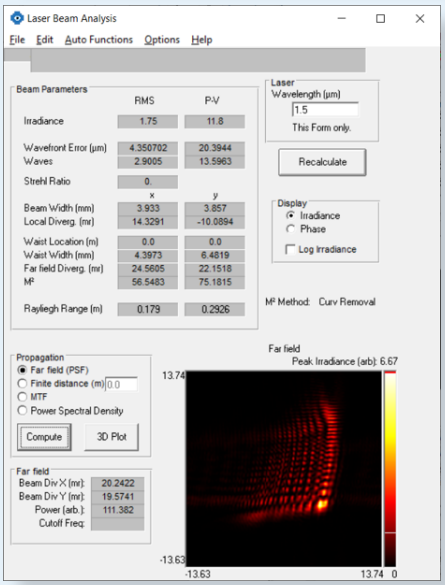

Point spread function, MTF or propagation analysis available.